记号:	变更原因	签认日期
A2		
A1		

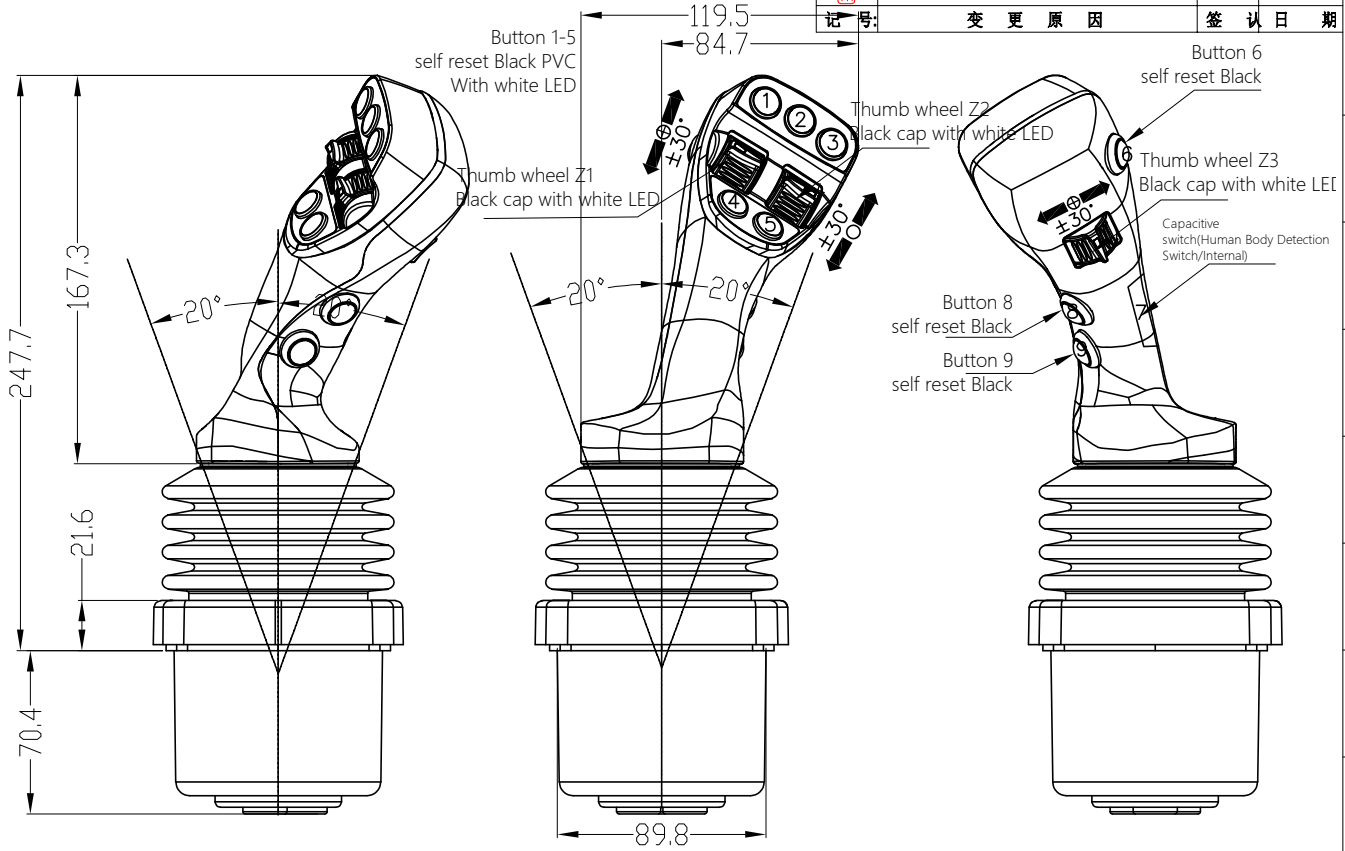

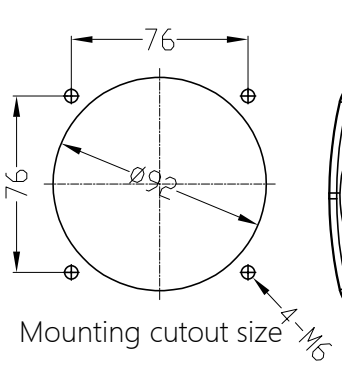

Mounting cutout size

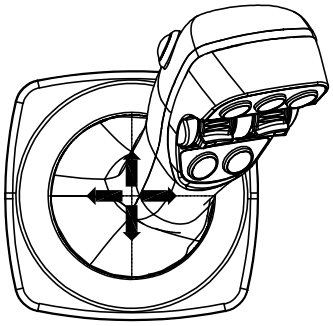

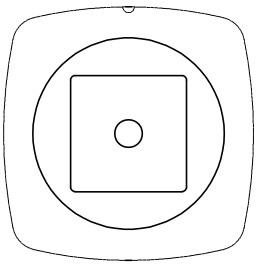

Square operation limited

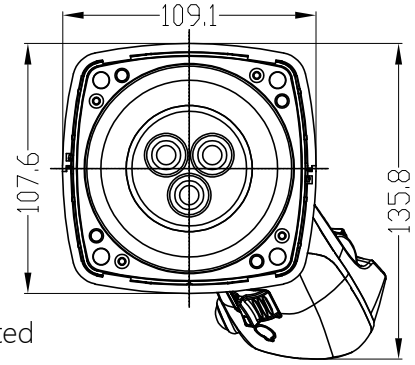

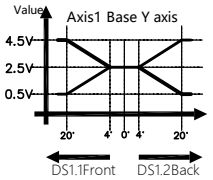

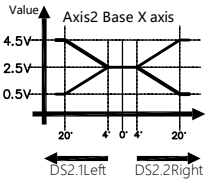

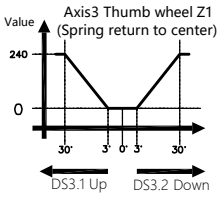

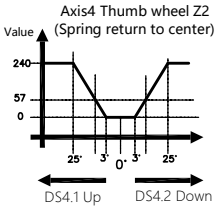

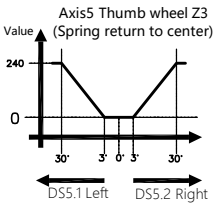

Joystick CAN transmission: 250K / Extended Frame ID = 0CF0F110 / Transmission Cycle: 20MS

Byte	Bit7	Bit6	Bit5	Bit4	Bit3	Bit2	Bit1	Bit0	Description
Byte0					Right	Left	Back	Front	Direction indication
Byte1	A7	A6	A5	A4	A3	A2	A1	A0	Axis1-Y Angle value 0-255,center=0
Byte2	A7	A6	A5	A4	A3	A2	A1	A0	Axis2-X Angle value 0-255,center=0
Byte3	Button9		Z3−	Z3+	Z2−	Z2+	Z1−	Z1+	Thumb wheel direction
Byte4	A7	A6	A5	A4	A3	A2	A1	A0	Axis3-Z1 Angle value 0-240,Center=0
Byte5	A7	A6	A5	A4	A3	A2	A1	A0	Axis4-Z2 Angle value 0-240,Center=0
Byte6	A7	A6	A5	A4	A3	A2	A1	A0	Axis5-Z3 Angle value 0-240,Center=0
Byte7	Button8	Capacitive switch	Button6	Button5	Button4	Button3	Button2	Button1	Digital input (switch)

Note: Direction indication: (Up+; Down-; Forward+, Back-; Right+, Left-) 1=Valid, 0=Invalid / Button: 1=pressed, 0=released

Joystick CAN reception (button backlight control): 250K / extended frame ID = 0CF0F210

Byte	Bit7	Bit6	Bit5	Bit4	Bit3	Bit2	Bit1	Bit0	Description
Byte0			Button2 LED 00=Off/01=On/02=Pulsating				Button 1 LED 00=Off/01=On/02=Pulsating		Button1/2 LED
Byte1			Button4 LED 00=Off/01=On/02=Pulsating				Button3 LED 00=OFF/01=ON/02=Pulsating		Button3/4 LED
Byte2			Button6 LED 00=Off/01=On/02=Pulsating				Button5 LED 00=Off/01=On/02=Pulsating		Button5/6 LED
Byte3			Thumb wheel Z2 LED 00=Off/01=On/02=Pulsating				Thumb wheel Z1 LED 00=Off/01=On/02=Pulsating		Thumb wheel Z1/Z2 LED
Byte4									
Byte5									
Byte6									
Byte7									

(1)Left handle, equipped with an induction enable switch function
(2) Base structure: Front and back springs return to the center
Left and right spring return to center
(3) Operating angle: XY axis of the base:±20°
Thumbwheel:±30°
(4) Power supply: DC24V (Min: 10V, Max: 38V)
(5) Operating current: Less than 200mA (@DC24V)
(6) Signal output: CAN
(7) Operating temperature: -30°C to +85°C
(8) Storage temperature: -40°C to +85°C
(9) Protection level: IP65 above panel
(10) EMI/RFI : CE/FCC
(11) Vibration: 25g, 30Hz, 500 cycles, 3 directions, IEC 60068-2-29 test Eb
(12) Wiring harness: Length 40CM
<Production, Protocol=0x20 New Parameter Setting Method >
The dead zone of the XY-axis sensor should be small, limited only by mechanical clearance

CAN bus - Deutsch connector

DTM04-4P(male)
1. Power: +24V
2. CANH
3. CANL
4. Power GND

Model No.: MKF-JS60B-V1-L-BCP-2Q-W-CAN

Mate Technology Shenzhen Limited www.matend.com					
Draw:	4	2026-01-23	Scale: 1:1	View:	
Design:	4	2026-01-23	Stage	Unit:	mm
Audit:	2	2026-01-23		DE-SKB	
Approve:	1	2026-01-23	Page 1 of 1		